Digital Pulse Processor

APV8108-14(1Gsps)

MADE IN JAPAN

VME

20180808

Features

- ADC — 1Gsps, resolution: 14-bit, 8 channels
- Time resolution — Coarse：1ns | Fine：3.9ps , LSB
- Throughput — 1Mcps and more / channel
- Analyze more — List(TDC+QDC), Wave, Histogram, List-Wave *1
- Functions — (digital)CFD, TDC, QDC, PSA *1 , coincidence*1
- Communication I/F — TCP/IP, Gigabit ethernet
  Data transfer: 10MByte (Gigabit) / second more
- Usage example — Multi channel system using plastic scintillator
  Multi channel system using scintillators and wire chamber etc.

*1 Addition of options, specification change is possible.

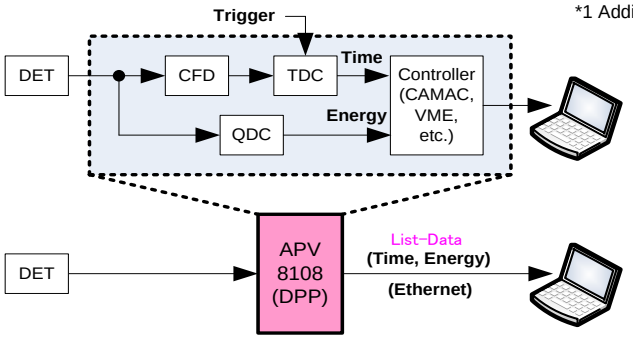

◆ List data example

***TDC 1digit is 3.9 ps**

	80 – 15	11 – 0	
Event#1	TDC[63..0]	CH[3..0]	QDC[11..0]
Event#2	TDC[63..0]	CH[3..0]	QDC[11..0]
⋮			
Event#N	TDC[63..0]	CH[3..0]	QDC[11..0]

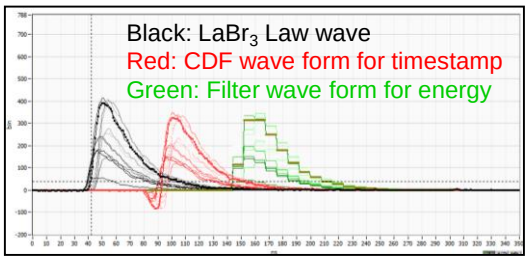

Wave mode: $LaBr_3$ detector used

◆ Usage example using multi board

List mode measurement

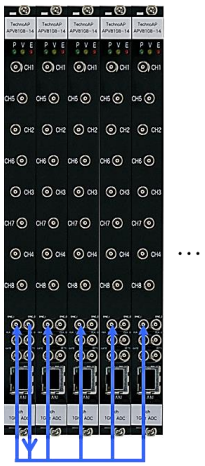

Connect Sync-CLR of board #0 to other Sync-CLR-I

List-Com mode measurement

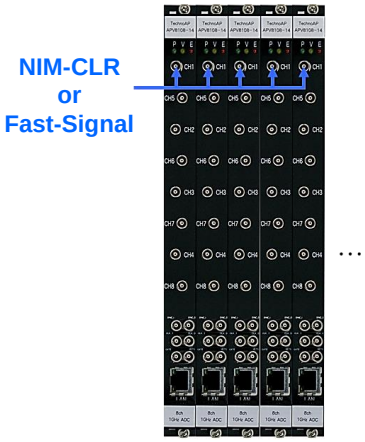

Repeated CLR is entered, and when measuring the time difference spectrum from T_0, input CLR to CH 1 of each board. Use a fast rise signal such as NIM.

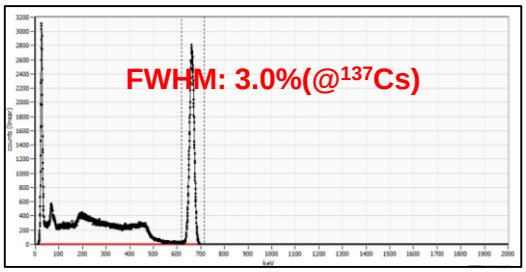

Energy Spectrum: $LaBr_3$ detector used

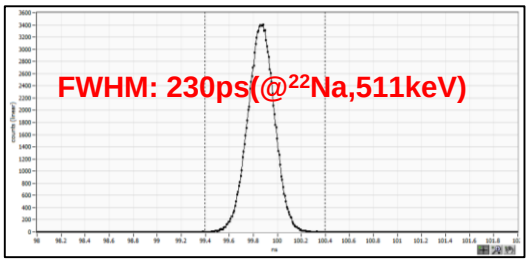

Time Spectrum:
$LaBr_3$ detector vs $LaBr_3$ detector

*Custom order, custom firmware production available.
*Please note that contents may change without prior notice.

Website

Manufacture of Radiation and Radioactivity measurement devices

TechnoAP Co., Ltd.

2976-15 Mawatari, Hitachinaka-shi, Ibaraki, 312-0012, Japan

☎ +81-29-350-8011
+81-29-352-9013
✉ order@techno-ap.com